IMPARTE
EQUIPAMENTOS DE SEGURANÇA

Technical Data Sheet

Designation 3” SIAMESE CONNECTION WITH TWO 75MM STORZ INLETS

Brand AWG **Ref. No.** BCS03







Features

Siamese-type fire inlets are designed to be fitted to dry or wet risers in buildings for use by the fire brigade.

Dimensions

- LxWxH 280x230x350mm;
- Inlet centre distance 180mm;

Construction features

- Siamese connection with body, inlet elbows and non-return valves in cast brass, exterior with 70µm thermosetting electrostatic powder coating, RAL 3001 "Flame Red";
- Forged brass drain valve;
- Brass Storz adapters and caps;

Connections

- Two ⊘ 2½” inlets with Storz and 75mm cap;
- ⊘ 3 swivel outlet with female thread;

Standards, certificates, marking and documentation

- CE marking in accordance with NP671-2:2013;
- DIN 14461 T4 approval; PN 16

How to order

- Ref. BCS03_3” AWG Siamese connection

The images shown are for illustration only and may differ slightly from the final product(s).

www.imparte.pt

HQ| Edifício Imparte, Alto da Barrada,
2785-646 São Domingos de Rana, Portugal

(+351) 214 448 440
(Call to a national landline)

geral@imparte.pt

IMPARTE
EQUIPAMENTOS DE SEGURANÇA

Technical Data Sheet

Designation 3” SIAMESE CONNECTION WITH TWO 75MM STORZ INLETS

Brand AWG **Ref. No.** BCS03

Optional and/or additional

- Aluminium Storz adapters and caps;
- Frame and door for Siamese connection;
- Box for Siamese connection;
- Pipework and connection fittings not included;
- Painted in another RAL colour, provided it is approved in the project/by site supervision;
- Photoluminescent signage in accordance with 92/58/EEC;
- We make boxes, frames and doors to order.

Technical Drawing

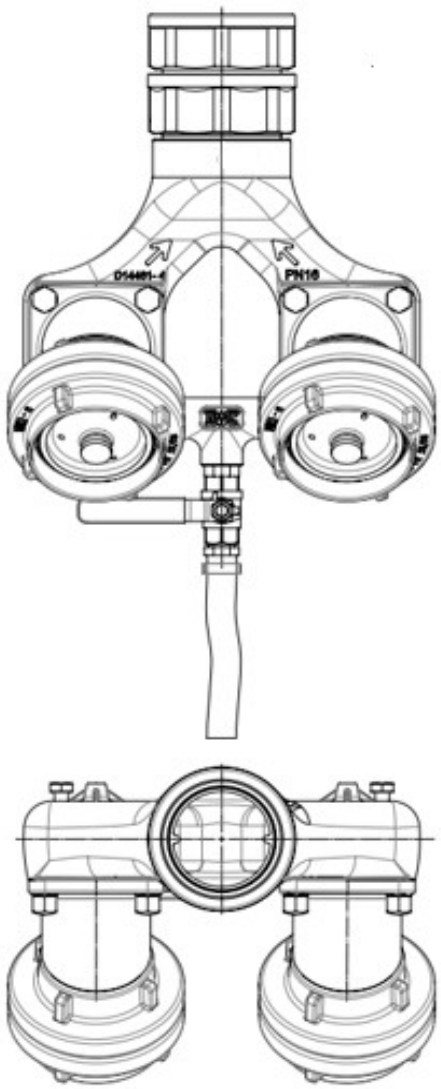

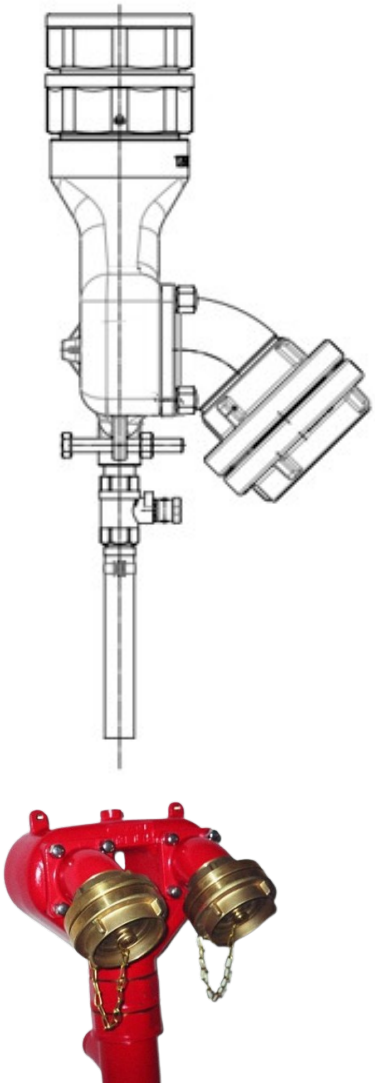

The images shown are for illustration only and may differ slightly from the final product(s).

www.imparte.pt

HQ| Edifício Imparte, Alto da Barrada,
2785-646 São Domingos de Rana, Portugal

(+351) 214 448 440
(Call to a national landline)

geral@imparte.pt